EU TYPE-EXAMINATION CERTIFICATE

Application of:
Council Directive 2014/33/EU, issued as "Lifts Directive"

CERTIFICATE NO.: **23-GOT-LD-001**

THIS IS TO CERTIFY THAT THE PRODUCT

Landing door locking device as a part of a complete locking device

IDENTIFICATION

Aritco Top Mounted Electric Lock

MANUFACTURED BY

Scandinavian Lift Accessories AB

AT

Lotsvägen 2B, 68154 Kristinehamn, Sweden

complies with the requirements of the Lifts Directive 2014/33/EU.

LIMITATIONS

Any modifications made to the product shall immediately be reported to Kiwa Sweden AB in order to examine whether this Certificate remains valid.

This Certificate is valid from: 2023-03-31

MÖLNDAL, 2023-03-31
Kiwa Sweden AB
Notified Body No.: 0409

SWEDAC ACKREDITERING
Accred. No. 1181
Certification of products
ISO/IEC 17065

Peter Svensson
Certificate is issued by

Ulf.Bengtsson@kiwa.com
Elektroniskt undertecknad av Ulf.Bengtsson@kiwa.com
SN: cn=Ulf.Bengtsson@kiwa.com
Datum: 2023.04.06 07:20:30 +02'00'

Ulf Bengtsson
Technical Engineer

Notice: Any significant changes in design or construction of the product, or amendments to the Directive or Standards referenced above may render this receipt invalid.

EU TYPE-EXAMINATION CERTIFICATE

CERTIFICATE NO.: **23-GOT-LD-001**

Certificate history

Revision	Description	Issue date
1.0	This is the original Certificate	2023-03-09

Products covered by this Certificate

Product description	Product Name	Category	Product Group
A part of a complete locking device for hinged landing doors	Aritco Top Mounted Electric Lock	Lift safety component	Lifts

Limits of key parameters

Type AC or DC	Voltage	Rated Current
AC	48V	1A
DC	48V	0,021A

Additional information

Landing door locking device type Top m.El Lock does not by itself comply with the requirements of EN81-20 5.3.10 Requirements common to devices for proving the locked condition and the closed condition of the landing door. For Top m.El Lock, additional means has to be provided to comply with the requirements of 5.3.10. Landing door locking device used for vertical locking for hinged doors, closest to the day opening for hinged doors showed in ”MONTAGEANVISNING FÖR HISSDÖRRLÅS Top m.El Lock”.

There are four models of Top m.El Lock locking devices in this certificate, LLD.S.18EM, LLD.D.18EM, LLD.S.18W, LLD.D.18W, the difference is that S are single vertical locking bolt, D are double vertical locking bolts, EM are Electromotor opening and W are Wire opening

Applied Standards/Tests carried out

EN 81-20:2020 Safety rules for the construction and installation of lifts - Lifts for the transport of persons and goods - Part 20: Passenger and goods passenger lifts.

EN 81-50:2020 Safety rules for the construction and installation of lifts - Examinations and tests - Part 50: Design rules, calculations, examinations and tests of lift components

Test laboratory

The tests have been witnessed by the Kiwa Sweden AB

EU TYPE-EXAMINATION CERTIFICATE

CERTIFICATE NO.: **23-GOT-LD-001**

Annexes of this Certificate

Annex No.	Description
1	Lift Locking Device LLD.S.18EM
2	Lift Locking Device LLD.D.18EM
3	Lift Locking Device LLD.S.18W
4	Lift Locking Device LLD.D.18W

The following documentation formed the basis for the assessment:

Document No.	Name/Title	Version/Date
1	Technical construction file 23-GOT-LD-001 rev 1.0 Aritco Top Mounted Electric Lock	2023-03-07

Terms and conditions

The certificate is subject to the following terms and conditions:

- In case of damages caused by defective products, directive 85/374/eec, as amended, will apply
- The certificate is only valid for the product(s) listed above
- The certificate is concerned with the design of the product, only

The following may render this Certificate invalid:

- Changes in the design or construction of the product(s)
- Changes or amendments to the referenced directive(s)
- Changes or amendments in the standard(s) which form the basis for documenting compliance with the requirements
- To keep it valid the product has to be subject to, random check according to Lifts Directive 2014/33/EU Annex IX, or a quality system, se Annex VI or VII.

END OF CERTIFICATE

EU TYPE-EXAMINATION CERTIFICATE

CERTIFICATE NO.: **23-GOT-LD-001**

ANNEX 1.

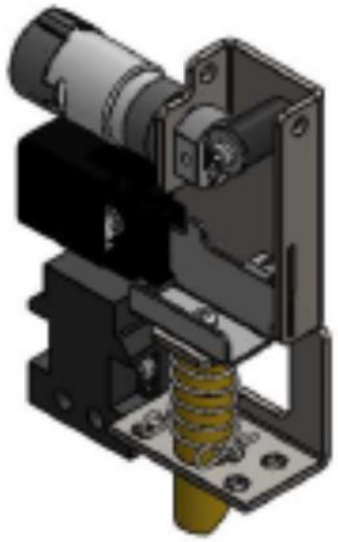

ANNEX 2.

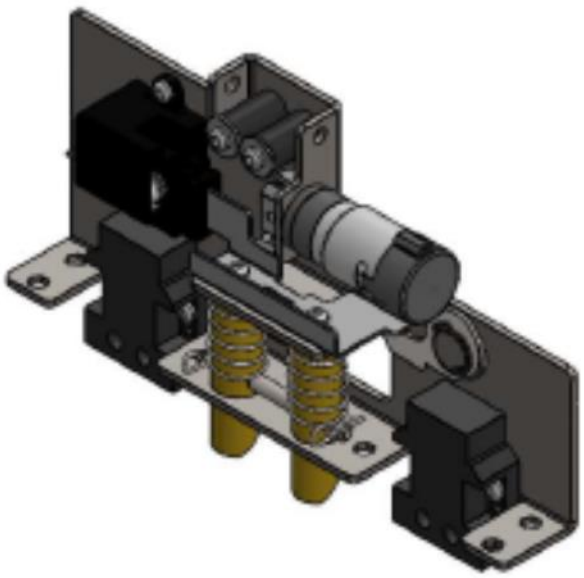

ANNEX 3

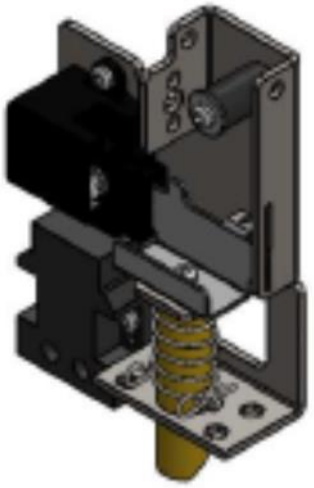

ANNEX 4.

